Why are Some Recommendation Systems Preferred?

Gaofeng Yi

Dean, Business School, yigf@yctu.edu.cn

Yancheng Teachers University, 2, Nan Road, Xiwang Avenue, 224007 Yancheng City, Jiangsu Province, P.R. China

Abstract

There has been wide interest in exploring ways to provide more efficient personalized recommendation systems (RSs) in order to attract customers and increase product sales. The majority of the existing studies are concerned with improving the accuracy and effectiveness of the recommendation algorithms or focusing on how to limit perceived risks with the aim of increasing consumer satisfaction. Unlike these aforementioned studies, this research begins from the perspective of customer-RS interaction and ends with revealing the mechanisms involved in consumers' acceptance of recommendations by using the technology acceptance model. The empirical results show that perceived interpersonal interaction is an important factor that directly impacts university students' intentions to use RS, while the perceived ease-of-use influences them in an indirect way through the mediation of perceived usefulness. On this basis, the study thus provides suggestions on how to provide improved interactions with an easy-to-use personalized RS.

Keywords: online personalized recommendation system (RS); technology innovation; customer choice; customer-RS interaction; adoption intention

Citation: Yi G. (2020) Why are Some Recommendation Systems Preferred? *Foresight and STI Governance*, vol. 14, no 2, pp. 76–86. DOI: 10.17323/2500-2597.2020.2.76.86

The development of e-commerce has transformed consumers' traditional purchasing habits, and online purchases have gained much popularity in recent years. As of December 2018, Chinese online shoppers reached a staggering 610 million according to the 43rd China Statistics Report on Internet Development released by China Internet Network Information Center (CNNIC) in February 2019 [CNNIC, 2019]. With the rapid development of online purchasing sites, an increasing number and variety of goods are available on e-commerce websites. However, customers with complaints have to face a massive data jungle resulting in frustration and confusion to order and receive their selection on a specific date. Recommendation systems (RSs) arose in response to this situation, which proved to be a valuable tool in helping customers [*Jannach et al.,* 2010]. Such systems provide customers with information and suggestions to help them with their decision making and purchasing process [*Resnick, Varian,* 1997; *Qiang et al.*, 2016]. According to the user's preferences gleaned from the customer-RS interaction information, the RS actively recommends products or provides interesting information, which helps decrease confusion, tap into potential demand, and increase the sales of e-commerce goods.

According to the China University Students' Consumption Insight Report, released by IResearch in August 2018, annual consumption by students amounts to 381.6 billion RMB, of which over 95% are online purchases. It seems as a group, students prefer to choose personalized RSs with specific characteristics [IResearch, 2018]. The main goal of a RS is to aid users in their online decision making process [*Jannach et al.,* 2010] and thereby simplify specific item searches. Confusing personalized RS not only does not help users improve decision-making efficiency, but make them sceptical of future help. During the decision-making process, the "true feeling" of the interaction between the user and the RS is a key factor in determining whether or not to adopt the RS and purchase the recommended commodity. In recent years, the influencing factors of RSs have been an important research topic in such fields as computer science and marketing. Nonetheless, they are now focusing on to how to improve the accuracy of the algorithm but still face the problem of lacking customer acceptance [*Herlocker,* 2004]. With virtualization, cloud computing, and big data technology being the important foundation for the development of RSs, the "physical" level of RSs has been better developed, but the degree of "personalization" has not been improved simultaneously. The recommendation system is focused on "computers", mainly on the "hard" problems of computer software and hardware systems such as database, storage, recommendation algorithm, and so on. In turn, the personalized recommendation system is oriented to "human" factors, mainly focusing on the main body of the system — the actual behavior of the user and their real subjective feelings, from which they start in order to explore the "soft" issues of the content and interaction with the system service supply. Therefore, the personalized recommendation system should pay more attention to the user's "interaction and experience." It is a pity that scant attention has been paid to the perception of customer-RS interactions. This is the research gap our study addresses.

The algorithm is not the main focus of personalized recommendation research, users' external behavior and their inherent psychological characteristics are the core. Therefore, based on the perspective of "interaction" and focusing on the "human" factor, this study proposes an RS adoption intentions (RSAIs) model based on the technology acceptance model (TAM), which is used to fill the gap on factors that influence the development of RSAIs and considers the university students' perceived interpersonal interactions and perceived human-computer interactions (perceived ease of use along with perceived usefulness) (Figure 1). Compared with previous literature, the incorporation of "customer-RS" reaction theoretical framework can offer a more holistic representation of the interactions' relationship with various factors. This study provides a basis, gained from factual evidence, for the proper design of a recommendation system. With the rapid development of e-commerce and the universal use of a personalized RS in China, these findings are a generalization and can provide useful references. The findings will be vitally important to actors who are concerned with the improvement of RSs and increasing sales.

Theoretical Foundation and Literature Review

Recommendation System

The development of RS started as early as 1980s [*Salton, McGill,* 1986] and to this date, it is an expanding research field. With the proliferation of big data, RS is now a very crucial and useful tool utilized extensively in seeking customer satisfaction based on business-to-consumer relations through personalization [*Ricci et al.,* 2011]. Based on the interaction with consumers, RS aims at selecting and suggesting the most relevant items, information, services, and special promotions to their users by considering their profiles, purchase history, preferences, opinions, and communication with offered products and services [*Villegas et al.,* 2018]. Existing literature explored the partial influencing factors related to the characteristics of the user and recommendation system. For example, they

proposed that the usefulness of recommendations, user preferences, and privacy protection have a positive and significant impact upon the adoption intention of RS [*Carlson et al.,* 2015]. However, there are few studies on the interaction between consumers and RS, especially from the perspective of the integration of "interpersonal interaction and human-computer interaction" despite the fact that the perception of interaction is the key factor influencing the customers' decision on whether to continue using the system. Therefore, we need further research on "customer-RS" factors in order to explore how it operates among the university students.

University students, generally possess a higher intellect and have a strong ability to search for and process information, but lack adequate finances. Their spending ability, while limited, does not deter them from using mobile devices for communication such as smart phones while attempting to become fashionable with the latest wardrobe, purchase train or airplane tickets, and hotel bookings. Before actually purchasing, they have a propensity to evaluate all aspects of a product or service to ensure their expectations are met. Therefore, the experience of the decision-making process from the interaction between university student consumers and RS is not only very critical for increasing sales, but also plays an important role in driving them to adopt RSs.

Perceived Interpersonal Interaction and RS Adoption Intention

Based on computer networks, Hoffman and Novak [*Hoffman, Novak,* 1996] proposed interactive forms of human-computer interaction and interpersonal interaction between users and systems. The user directly indicates his or her needs to the recommendation system by browsing, searching, and sending information. The system recommends products that may be of interest to the user and the user then feeds back the recommendation results, and the communication between the users and the system forms an interactive process. Interpersonal interaction refers to the interaction through the recommendation system, emphasizing the recommendation system as a medium for communication between humans, through which users can share values, exchange information, and maintain interpersonal relationships. Narver and Slater [*Narver, Slater,* 1990] pointed out that customers' sense of value comes from the product characteristics and interpersonal interaction process with a particular emphasis on the influence of interpersonal interaction.

The RS provides real-time feedback based not only on the user's past documented records, but also on the behavior data of the present. It is suggested that the higher the level of consumer participation in personalized recommendations, the greater their satisfaction and trust in the recommendations [*Dabholkar, Sheng,* 2012]. Therefore, the system needs to be continuously interacting with the users and analyzing feedback information to correct and optimize the recommendation results. The "satisfaction" and interactivity of the interactive interface of the RS can affect user experience. Product descriptions, reviews, ratings, and so on in the interactive interface have a significant impact upon the user experience. The simpler and clearer the navigation and layout of the recommended product list is, the higher the consumer satisfaction [*Bo, Benbasat,* 2007]. When a consumer is dissatisfied with a recommendation, a RS allows that potential consumer to modify preferences at any time before the sale is completed and dynamically adjusts the recommendation results according to the diagnostics of consumer modification. Consumers obviously have higher ratings for referral systems with similar interactive features [*Bo, Benbasat,* 2007]. Increasing interactive modification will increase consumer trust and satisfaction with the RS [*Pereira,* 2001]. Studies have shown that establishing visualized interactions has a positive impact upon increasing user satisfaction and user interaction with the system [*Zhao et al.,* 2010]. For example, SFViz (Social Friends Visualization) visualizes the connection between users and user interests, helping them find suitable friends with similar interests [*Gou et al.,* 2011]. The RS allows users to set up discussions that interest them with the possibility of establishing contact by tracking one other. The interactive query should be able to inform the user of the reason for query failure should there be one and the strategy for modifying the query. Informing consumers of the search progress during the interactive process of product-searching can lead them to think that the system saves them from more and possibly unfruitful search attempts [*Bechwati, Xia,* 2003]. As a result, consumers' satisfaction and evaluation of the search process are increased. Thus, perceived interpersonal interaction is an important antecedent for the adoption intention of RS.

Perceived Human-Computer Interaction and RS Adoption Intention

Davis [*Davis,* 1989] applied the Theory of Planned Behavior (TPB) to the study of information technology acceptance and proposed the technology acceptance model (TAM). According to TAM, perceived human-computer interaction can be divided into two dimensions: perceived ease of use and perceived usefulness, which both affect the user's intention to use the new information technology, thereby affecting his/her usage behavior [*Davis,* 1989; *Smith,* 2013]. Perceived ease of use is defined

as the degree to which a user believes that using a certain system would be free from complications. The term perceived usefulness refers to the degree to which a person believes that using a certain system would help enhance work performance [*Davis,* 1989]. Existing literature has confirmed that perceived ease of use and usefulness did have an influence upon customers' RS adoption intention. Some studies even stated that perceived ease-of-use and perceived usefulness have been identified as important factors that impact users' continued intention to use RSs [*Roca, Gagné,* 2008; *Rodrigues et al.,* 2016; *Jeng, Tseng,* 2018]. For example, it was confirmed that perceived ease of use impacts individuals' intentions to adopt information technology [*Yuan, Jeyaraj,* 2013]. Moreover, according to the TAM, perceived usefulness is determinant of RS adoption intention and perceived ease of use enhances the perceived usefulness effect for IS adoption [*Tsai et al.,* 2011; *Yi et al.,* 2018]. Therefore, this study examines the relationship of three candidates, these are perceived ease of use, perceived usefulness, and adoption intention.

Conceptual Models and Hypotheses

In order to answer the key question, we need further research on "customer-RS" factors and to explore their relationships and mechanisms among the university students. Therefore, we propose the RS adoption intentions (RSAIs) model to fill the gap (Figure 1) based on the TAM. Using quantitative research, this study aims to determine the key influencing factors and their effects upon RSAIs through empirical data to provide references for future RS producers and consumers. The following six hypotheses are formulated.

Firstly, the hypotheses in this study are to confirm the relationships among perceived interpersonal interaction, perceived ease of use, and university students' RS adoption intentions.

H1: Perceived interpersonal interaction has a significant positive effect on RS adoption intention.

H2: Perceived interpersonal interaction has a significant positive impact upon perceived ease of use.

H3: Perceived ease of use has a significant positive impact upon the RS adoption intention.

Secondly, the hypotheses in this study are to evaluate the relationship among perceived ease of use and perceived usefulness. According to the TAM, perceived ease of use enhances the perceived usefulness effect upon IS adoption [*Tsai et al.*, 2011; *Yi et al.*, 2018]. Thus, the hypothesis is as follows:

H4: Perceived ease of use has a significant positive impact on perceived usefulness.

Thirdly, the hypotheses deal with the relationships among perceived interpersonal interaction, perceived usefulness, and RS adoption intention. It is thus hypothesized that they follow an action path as "perceived interpersonal interaction → perceived usefulness → university students' RS adoption intention". These hypotheses are as follows:

H5: Perceived interpersonal interaction has a significant positive impact upon perceived usefulness.

H6: Perceived usefulness has a significant positive effect on RS adoption intention.

Methods

Participants and Data Collection

This study selected at random 1,500 university students from the eastern, central, and western regions of China according to the research objectives laid down in April 2018. The primary data collection for variables was undertaken online through a structured questionnaire, which was distributed to the students by their supervisors, mainly via QQ or WeChat group, a convenient platform for the students to respond utilizing cell phones or computers. A total of 1,072 valid questionnaires were collected, broken down as follows: 590 (55.04%) eastern, 244 (22.76%) central, and 238 (22.2%) western regions of China, all undergraduates for which the male to female ratio was 354 (33.02%) and 718 (66.98%), respectively.

Measures

The theoretical model of RSAIs in this study principally includes one dependent variable, namely, RS adoption intention and three independent variables, that is, perceived interpersonal interaction, perceived ease of use, and perceived usefulness. The four constructs measured in this present study are mainly adopted from existing scales. All proposed questions were evaluated with a five-point Likert scale ranging from 'strongly disagree' (1) to 'strongly agree' (5). All items are shown in Table 2.

This study defines perceived interpersonal interaction as the extent to which users believe that using a RS would be flexible, offer convenient exchanges of relevant information, and efficiently deal with the purchase process with the service provider, thereby providing a satisfactory experience. For example, a consumer is able to modify any purchase preference thus giving flexibility to the whole interaction and allowing one to communicate with other consumers going as far as befriending others with similar interests. There are six items on the scale derived from [*Dong et al.,* 2014; *He et al.,* 2018].

In addition, by "perceived ease of use", we mean the extent to which consumers believe that using a

RS would be effortless [*Hsu et al.,* 2014]. There are four items on the scale derived from [*Davis,* 1989; *Tsai et al.,* 2011; *He et al.*, 2018]. Perceived usefulness pertains to the degree to which a consumer believes that adopting a RS would be beneficial. Four items used to measure perceived usefulness are adapted from the scale of [*Davis,* 1989; *Dong et al.,* 2014].

Finally, adoption intention refers to a consumer's subjective probability, intention, and prospects with regard to the adoption of a RS for purchasing a product or a service. Three items used to assess adoption intention are adapted from the scale of [*Dodds,* 1991; *Bhattacherjee, Premkumar,* 2004; *Tsai et al.,* 2011; *Jeng, Tseng,* 2018].

Figure 1. **Research Framework of RSAIs**

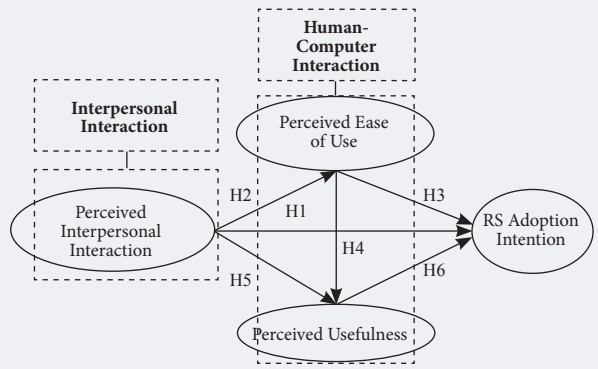

Source: compiled by the author.

Empirical Analysis

Confirmatory Factor Analysis (CFA)

Amos 24.0 software is used for CFA in order to assess the model fit criteria, reliability, convergent validity, and discriminant validity (Table 1). For the model's goodness-of-fit index, the test results are presented as follows: $\chi2 = 301.609$, $\chi2/df = 2.67<5$, CFI = 0.98, GFI = 0.97, AGFI = 0.96, NFI = 0.97, RFI = 0.96, IFI = 0.98, TLI = 0.98, and RMSEA = 0.039, SRMR = 0.028. The four constructs are proved to have satisfactory reliability because the overall values of Cronbach's α exceeds 0.8 and the composite reliability ranges from 0.80 to 0.87, exceeding the suggested benchmark of 0.60 [*Bagozzi, Yi,* 1989] (Table 2). For the validity test, all the measured items' factor loadings range from 0.67 to 0.78 (all $p < 0.001$), the average of variance extracted (AVE) estimates are ≥ 0.6, and most of the square multiple correction values are greater than 0.5, as is shown in Table 2 (above 0.36 is acceptable and above 0.5 is ideal) [*Fornell, Larcker,* 1981].

Discriminant validity is assessed with the following two strategies. Firstly, this study constructs six constrained models, in which a particular correlation coefficient is fixed to 1. For instance, in M2, the fixed parameter is the correlation between CRSI and PEoU. Subsequently, a series of $\chi2$ change tests are conducted to determine whether the constraint conditions worsen model fits compared to the basic model (i.e., M1) in which all correlations are freely estimated [*Anderson, Gerbing,* 1988]. The resulting significant differences in $\chi2$ value indicate that the discriminant validity is approved (Table 3). Secondly, this study examines the confidence intervals of correlations among latent variables using the Bootstrapping method. As is shown in Table 3, the discriminant validity is provided because the value of 1 is not included in all of the computed confidence intervals [*Bagozzi, Phillips,* 1982], similar to the studies of [*Kolar, Zabkar,* 2010; *Zampetakis et al.,* 2015; *Fernández-Pérez et al.,* 2019]. Therefore, the discriminant validity of the measurement model proves to be adequate.

Hypothesis Testing

Before hypothesis testing, the adaptability analysis of the structural model must be tested. Again the Amos 24.0 software was used to obtain the goodness-of-fit indices of the model, and here are the results: $\chi2 = 301.61$, $\chi2/df = 2.67<5.0$, RMSEA = 0.039<0.80, SRMR=0.028, GFI = 0.97, AGFI = 0.96, CFI = 0.98, NFI = 0.97, RFI = 0.96, and TLI = 0.98, which indicates that the model has a satisfactory model for goodness-of-fit [*Hair et al.,* 2010].

Subsequently, the aforementioned hypotheses in this model were tested and the results are shown in Figure 2. It was found that perceived interpersonal interaction has direct and significant impacts upon university students' RSAIs and their standardized path coefficients are 0.243***. Therefore, we conclude that H1 is supported. Meanwhile, perceived interpersonal interaction has direct and significant impacts upon perceived ease of use and perceived usefulness, and their standardized path coefficients are 0.662***and 0.605***, respectively, showing that H2 and H5 are verified.

As for the relationships among perceived ease of use, perceived usefulness, and RSAI, it is clear that perceived ease of use has direct and significant impacts upon perceived usefulness and the same being true with perceived usefulness on RSAI, with the standardized path coefficients of the former being 0.379*** and that of the latter 0.652***. In this evaluation, H4 and H6 are confirmed. All path coefficients, except for H3, are found to be significant ($p < 0.001$). H3 states that perceived ease of use has a significant positive impact upon the RS adoption intention. However, according to the test

Table 1. **Description of Variables**

Construct	Item	Measures
Interpersonal interaction		
Customer-RS interacttion (CRSI)	CRSI1	The RS is flexible for me to interact with
	CRSI2	The RS provides a dedicated module to collect my evaluation of the items
	CRSI3	I can modify my shopping preferences at any time
	CRSI4	The RS encourages interactions among users
	CRSI5	The RS provides a platform for two-way communication
	CRSI6	I can choose the objects and time of interactions and the degree of information disclosure
Human-computer interaction		
Perceived ease of use (PEoU)	PEoU1	Learning to operate the RS is easy for me
	PEoU2	Becoming skillful at using the RS is easy for me
	PEoU3	I find it easy to complete online shopping by using the RS
	PEoU4	I find the RS easy to use
Perceived usefulness (PU)	PU1	Using this RS would enable me to make purchase decision more quickly
	PU2	Using this RS would improve my purchase performance
	PU3	Using this RS would enable me to have extra benefits
	PU4	Using this RS would enhance my effectiveness in shopping
Adoption intention		
RS adoption intention (RSAI)	RSAI1	I will use the RS when I need to make a purchase
	RSAI2	I will continue online shopping with the help of RS
	RSAI3	I will use the RS in the future

Source: compiled by the author.

results, this hypothesis is not supported. In other words, perceived ease of use greatly affects perceived usefulness with its path coefficient standing at 0.379***.

The findings also reveal that perceived ease of use and perceived usefulness mediate the relationship between perceived interpersonal interaction and RS adoption intention for the reason that all the correlations between the variables are significant ($p<0.001$). Furthermore, the bootstrap test is performed at a 95% confidence interval with 5,000 samples [*Preacher, Hayes,* 2008; *Taylor et al.*, 2008] to investigate the indirect effects. As is shown in Table 4, the results of the bootstrap test confirm the existence of a positive and significant mediating influence upon perceived ease of use between perceived interpersonal interaction and RSAI (standardized indirect effect = 0.260, $P<0.001$), and also on perceived usefulness between perceived interpersonal interaction and RSAI (standardized indirect effect = 0.387, $P<0.001$). This is also valid for the case of perceived usefulness between perceived ease of use and RSAI (standardized indirect effect = 0.247, $P<0.001$).

Conclusions and Suggestions

Based on TAM, this study provides valuable research results regarding the possible relationships among perceived interpersonal interaction, perceived human-computer interaction, and RSAI.

From the analysis path of human-computer interaction, such results indicate that perceived ease of use has direct and significant impacts upon perceived usefulness, and the same being true with perceived usefulness upon RSAI. Perceived ease of use has an indirect influence on university students' intentions to use RS through the mediation of perceived usefulness. Therefore, it also indicates that perceived human-computer interaction is an important factor that affects university students' intentions to use RS.

From the analysis path of interpersonal interaction, such results indicate that perceived interpersonal interaction is an important factor that directly affects their intentions to use RS. Accordingly, the customer-RS interaction, ease of use, and usefulness of RS should all be improved in order to enhance students' RSAI, thereby playing the role of "human-computer interaction" and "interpersonal interaction", especially the role of the latter so as to attract more customers. For example, by improving the operation interface of the personalized recommendation system, the ease of use and usefulness of RS of the systems that customers use can be enhanced and human-computer interaction can also be strengthened to attract users. Through the recommendation system plug-in and corresponding module functions, users can comment, share, and discuss related products, earn points, form a commodity-social model, improve interpersonal interactions, and cultivate user loyalty.

Table 2. **Confirmatory Factor Analysis for the Measurement Model**

Item	Unstd.	S.E.	z-value	P	SFL	SMC	CR	AVE	Cronbach's Alpha
CRSI1	1.000	—	—	—	0.667	0.445	0.868	0.523	0.867
CRSI2	1.182	0.057	20.742	***	0.720	0.518			
CRSI3	1.158	0.054	21.497	***	0.751	0.564			
CRSI4	1.148	0.055	20.690	***	0.718	0.516			
CRSI5	1.215	0.057	21.341	***	0.744	0.554			
CRSI6	1.152	0.054	21.144	***	0.736	0.542			
PEoU1	1.000	—	—	—	0.769	0.591	0.849	0.585	0.849
PEoU2	1.027	0.041	24.923	***	0.771	0.594			
PEoU3	0.999	0.041	24.212	***	0.750	0.563			
PEoU4	1.004	0.040	24.871	***	0.769	0.591			
PU1	1.000	—	—	—	0.731	0.534	0.848	0.582	0.847
PU2	1.120	0.045	24.700	***	0.775	0.601			
PU3	1.069	0.043	24.622	***	0.772	0.596			
PU4	1.079	0.044	24.629	***	0.773	0.598			
RSAI1	1.000	—	—	—	0.731	0.534	0.793	0.561	0.792
RSAI2	1.063	0.045	23.369	***	0.756	0.572			
RSAI3	0.970	0.041	23.461	***	0.759	0.576			

Notes: N=1072; SFL= Standardized factor loading. CR = Composite reliability; AVE = Average variance extracted; *p <0.05; **p<0.01; ***p<0.001. For the description of item codes see Table 1.

Source: compiled by the author.

Implications for Practice

This research contributes to the work of practitioners, especially that of e-commerce managers. The empirical study shows that the interactions between users and the RS can improve the usability of the RS and enhance user willingness to adopt the RS. As is expected, the results of this study provide strong support for our first hypothesis and confirms that the positive effect of perceived interpersonal interaction on RSAIs is indeed significant. Interactions between users and RS can make the assumptions of technology acceptance easier by improving online shopping experiences in the following ways.

First, the RS can improve the interaction between the users and the system by providing fully functioning settings showing their preferences, such as questioning, rating, commenting, favorites recording, and giving approval ratings. Second, more attention can be given to network-based recommendations to improve the social value of personalized recommendation services. In this way, individuals from various social circles can generate a common stance on a certain product or service,

Figure 2. **Standardized Path Coefficient of the Model of RSAIs**

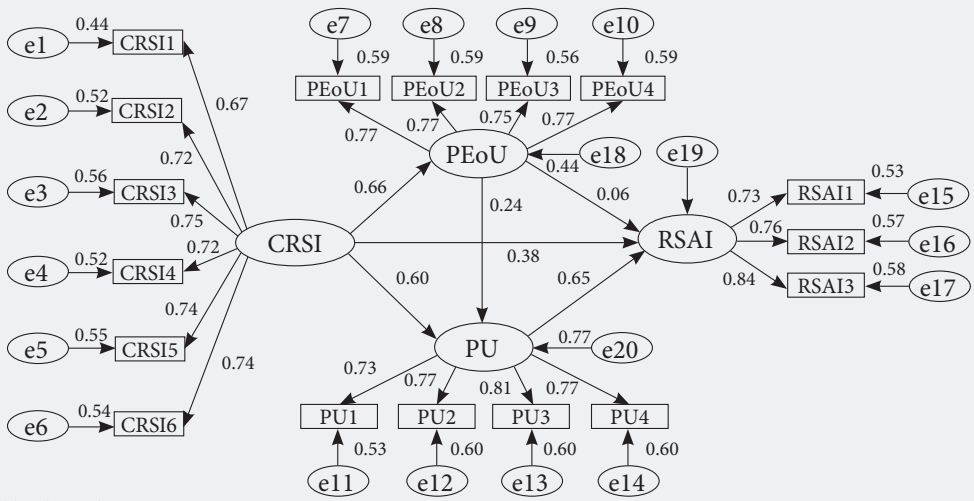

Source: compiled by the author.

Table 3. **The Test of Discriminant Validity of Each Measurable Variable**

Model		M1	M2	M3	M4	M5	M6	M7
Pair variable		Basic model	CRSI<--> PEoU	PEoU<--> RSAI	PU<--> RSAI	CRSI<--> PU	PEoU<--> PU	CRSI<--> RSAI
χ^2		301.609	692.847	611.202	538.782	605.564	595.931	606.049
df		113	114	114	114	114	114	114
$\Delta\chi^2$		—	391.238***	309.593***	237.173***	303.955***	294.322***	304.440***
Δ *df*		—	1	1	1	1	1	1
RMSEA		0.039	0.069	0.064	0.059	0.063	0.063	0.063
GFI		0.967	0.940	0.946	0.950	0.945	0.946	0.945
AGFI		0.956	0.919	0.928	0.933	0.926	0.927	0.927
TLI		0.977	0.929	0.939	0.948	0.939	0.941	0.939
CFI		0.981	0.940	0.949	0.956	0.949	0.950	0.949
Point estimation		—	0.662	0.729	0.907	0.855	0.779	0.841
Bootstrapping 5000 times, 95% CIs	Bias-corrected percentile	Min	0.601	0.665	0.870	0.818	0.726	0.796
		Max	0.716	0.785	0.941	0.890	0.826	0.879
		P	***	***	***	***	***	***
	Percentile	Min	0.601	0.664	0.870	0.819	0.726	0.797
		Max	0.716	0.784	0.942	0.891	0.825	0.880
		P	***	***	***	***	***	***

Note: CRSI — Customer-RS interaction; PEoU — Perceived ease of use; PU — Perceive usefulness; RSAI — RS adoption intention; *p <0.05; **p<0.01; ***p<0.001. CIs denotes confidence intervals.

*Source:*compiled by the author.

helping to attract more customers to use the RS and maintain existing ones. The third is to establish an incentive system to strengthen interactions with consumers. Due to the lack of data from new users, the RS does not possess adequate information to know about their preferences and thus may frequently provide low-quality recommendations. In this case, a customer reward system can operate, such as the giving of "points" or vouchers when logging in to a particular website. This enticement can be used to encourage them to actively enter personal preference information.

The empirical study also confirms that the development of customer-RS interaction would not only increase customers' RSAIs, but also be helpful in improving their perceived ease of use. This can be improved by:

1) Optimizing a search engine and navigation system of the online sites making it easier for the consumers to find the products they want.

2) Placing the recommendations in a more prominent position on the webpage and displaying them in an appealing color scheme. For example, using the keyword search "body clothing" a website might appear retailing high-end skin-tight sportswear. The designers of the site could predominantly use red and black to convey courage and maleness to attract users.

Table 4. **Summary of the Standardized Direct, Indirect, and Total Effects in this Model**

Path	Point estimation	Product of coefficients		Bootstrapping 5000 times 95% CI					
				Bias-corrected percentile			Percentile		
		SE	z-value	Lower	Upper	P	Lower	Upper	P
Standardized indirect effect									
CRSI → PEoU → PU	0.260	0.033	7.879	0.199	0.329	0.000	0.197	0.326	0.000
CRSI → PU → RSAI	0.387	0.065	5.954	0.269	0.525	0.000	0.270	0.527	0.000
PEoU → PU → RSAI	0.247	0.050	4.940	0.163	0.357	0.000	0.161	0.354	0.000
Total standardized indirect effect	0.894	0.110	8.127	0.696	1.126	0.000	0.696	1.124	0.000
Standardized direct effect	0.239	0.072	3.319	0.097	0.385	0.002	0.094	0.382	0.002
Total standardized effect	1.141	0.158	7.222	0.860	1.474	0.000	0.862	1.476	0.000

Notes: CRSI — Customer-RS interaction; PEoU — Perceived ease of use; PU — Perceived usefulness; RSAI — RS adoption intention; *p <0.05; **p <0.01; ***p <0.001.

Source: author.

3) Optimizing the interface design of the RS. For example, set the "sort" function button in the recommendation interface to facilitate consumers being able to categorize recommended products along with other helpful detailed searches to include user rating, price, and also highlight products that are on sale. However, caution should be used and one should not allow too many pop-up dialogs or dynamic ads on the website given that this can affect the loading speed of the webpage and complicate the consumer's ability to navigate due to and excess of information, thus slowing down the whole process.

Additionally, enhancing the usefulness of the system is also a possible option for improving the human-computer interaction when designing the recommendation system, thought needs to be given to improve the accuracy of the recommendation information in order to shorten the time for the customers to identify and select the products. Therefore, the acceleration of the recommendation responses is paramount while also trying to provide real-time recommendations which would allow customers to obtain the updated product information speedily. Another suggestion is to recommend personalized products for customers by conducting research and analyzing consumer behavior data, allowing users to feel that the recommendation system is not primarily aimed at advertising for the main purpose of increasing sales, but to meet their own personalized needs and thus improve their shopping experience in an efficient manner.

Limitations and Further Research

Although the findings of this study supply numerous meaningful references for practitioners, there are also certain limitations that can provide avenues for future studies. First, this study explores the influence of some key variables on the RSIA of university students. However, since the online RS cannot function independently without the embedded shopping websites and the design capability and service quality of the sites, they cannot be guaranteed, which results in the consumers' turning to the advice of the shopping website. As such, future studies should be devoted to delving into the factors affecting the RS of the shopping websites and the willingness to adopt the large personalized RS in a more comprehensive way on the basis of customer-RS interaction research. Second, the limited sample size of students might constrain the generalization of the results since the survey is restricted to the Chinese context. Therefore, it is suggested that future studies be conducted with broader data collection or less limiting constraints and consideration of such things as the specific geographical location or even cultural conditions.

References

Anderson J.C., Gerbing D.W. (1988) Structural equation modeling in practice: A review and recommended two-step approach. *Psychological Bulletin,* vol. 103, no 3, pp. 411–423.

Bagozzi R.P., Phillips L.W. (1982) Representing and testing organizational theories: A holistic construal. *Administrative Science Quarterly,* vol. 27, no 3, pp. 459–489.

Bagozzi R.P., Yi Y. (1989) On the use of structural equation models in experimental designs. *Journal of Marketing Research,* vol. 26, no 3, pp. 271–284.

Bechwati N.N., Xia L. (2003) Do computers sweat? The impact of perceived effort of online decision aids on consumers' satisfaction with the decision process. *Journal of Consumer Psychology,* vol. 13, no 1/2, pp. 139–148.

Bhattacherjee A., Premkumar G. (2004) Understanding changes in belief and attitude toward information technology usage: A theoretical model and longitudinal test. *MIS Quarterly,* vol. 28, no 2, pp. 229–254.

Bo X., Benbasat I. (2007) E-commerce product recommendation agents: Use, characteristics, and impact. *MIS Quarterly,* vol. 31, no 1, pp. 137–209.

Carlson J., O'Cass A., Ahrholdt D. (2015) Assessing customers' perceived value of the online channel of multichannel retailers: A two country examination. *Journal of Retailing & Consumer Services,* vol. 27, no 6, pp. 90–102.

CNNIC (2019) *The 43rd China Statistics Report on Internet Development*, Beijing: China Internet Network Information Center.

Dabholkar P.A., Sheng X. (2012) Consumer participation in using online recommendation agents: Effects on satisfaction, trust, and purchase intentions. *Service Industries Journal,* vol. 32, no 9, pp. 1433–1449.

Davis F.D. (1989) Perceived usefulness, perceived ease of use, and user acceptance of information technology. *MIS Quarterly,* vol. 13, no 3, pp. 319–340.

Dodds W.B. (1991) Effects of price, brand, and store information on buyers' product evaluations. *Journal of Marketing Research,* vol. 28, no 3, pp. 307–319.

Dong H.Z., Chang Y.P., Jian J.L., Xin L. (2014) Understanding the adoption of location-based recommendation agents among active users of social networking sites. *Information Processing & Management — An International Journal,* vol. 50, no 5, pp. 675–682.

Fernández-Pérez V., Montes-Merino A., Rodríguez-Ariza L., Galicia P.E.A. (2019) Emotional competencies and cognitive antecedents in shaping student's entrepreneurial intention: The moderating role of entrepreneurship education. *International Entrepreneurship and Management Journal,* vol. 15, no 1, pp. 281–305. DOI: 10.1007/s11365-017-0438-7.

Fornell C., Larcker D.F. (1981) Evaluating structural equation models with unobservable variables and measurement error. *Journal of Marketing Research*, vol. 18, no 1, pp. 39–50.

Gou L., You F., Guo J., Wu L. (2011) *Sfviz: Interest-based friends exploration and recommendation in social networks.* ACM International Conference Proceeding Series, 2011. DOI: 10.1145/2016656.2016671. Available at: https://www.researchgate.net/publication/254003084_SFViz_Interest-based_friends_exploration_and_recommendation_in_social_networks, accessed 23.10.2019.

Hair J.F., Black B., Babin B., Anderson R.E., Tatham R.L. (2010) *Multivariate data analysis* (7th ed.), London: Pearson Prentice Hall.

He Y., Chen Q., Kitkuakul S., Wright L.T. (2018) Regulatory focus and technology acceptance: Perceived ease of use and usefulness as efficacy. *Cogent Business & Management, vol. 5*, no 1, pp. 1–22. DOI: 10.1080/23311975.2018.1459006. Available at: https://www.cogentoa.com/article/10.1080/23311975.2018.1459006.pdf, accessed 25.10.2019.

Herlocker J.L., Konstan J.A., Terveen L.G., Riedl J.T. (2004) Evaluating collaborative filtering recommender systems. *ACM Transactions on Information Systems,* vol. 22, no 1, pp. 5–53.

Hoffman D.L., Novak T.P. (1996) Marketing in hypermedia computer-mediated environments: Conceptual foundations. *Journal of Marketing,* vol. 60, no 3, pp. 50–68.

Hsu M.H., Chang C.M., Chu K.K., Lee Y.J. (2014) Determinants of repurchase intention in online group-buying. *Computers in Human Behavior,* vol. 36, issue C, pp. 234–245.

IResearch (2018) *China university students' consumption insight report in 2018*, Beijing: IResearch.

Jannach D., Zanker M., Felfernig A., Friedrich G. (2010) *Recommender systems: An introduction*, Cambridge: Cambridge University Press.

Jeng R., Tseng S.M. (2018) The relative importance of computer self-efficacy, perceived ease-of-use and reducing search cost in determining consumers' online group-buying intention. *International Journal of Human and Technology Interaction,* vol. 2, no 1, pp. 1–12.

Kolar T., Zabkar V. (2010) A consumer-based model of authenticity: An oxymoron or the foundation of cultural heritage marketing? *Tourism Management,* vol. 31, no 5, pp. 652–664. DOI: 10.1016/j.tourman.2009.07.010.

Narver J.C., Slater S.F. (1990) The effect of a market orientation on business profitability. *Journal of Marketing,* vol. 54, no 4, pp. 20–35.

Pereira R.E. (2001) Influence of query-based decision aids on consumer decision making in electronic commerce. *Information Resources Management Journal,* vol. 14, no 1, pp. 31–48.

Preacher K.J., Hayes A.F. (2008) Asymptotic and resampling strategies for assessing and comparing indirect effects in multiple mediator models. *Behavior Research Methods,* vol. 40, no 3, pp. 879–891.

Qiang Y., Lin Z., Li Y., Shuang W., Sun T., Wang L., Chen H. (2016) Effects of product portfolios and recommendation timing in the efficiency of personalized recommendation: Effects of recommendation portfolios & timing. *Journal of Consumer Behaviour,* vol. 15, no 6, pp. 516–526.

Resnick P., Varian H.R. (1997) Recommender systems. *Communications of the ACM,* vol. 40, no 3, pp. 56–58.

Ricci F., Rokach L., Shapira B., Kantor P.B. (2011) *Recommender Systems Handbook*, Heidelberg, New York, Dordrecht, London: Springer.

Roca J.C., Gagné M. (2008) Understanding e-learning continuance intention in the workplace: A self-determination theory perspective. *Computers in Human Behavior,* vol. 24, pp. 1585–1604.

Rodrigues L.F., Oliveira A., Costa C.J. (2016) Playing seriously – how gamification and social cues influence bank customers to use gamified e-business applications. *Computers in Human Behavior,* vol. 63, no 9, pp. 392–407.

Salton G., McGill M. (1986) *An introduction to modern information retrieval*, New York: McGraw-Hill.

Smith A.D. (2013) Information exchanges associated with internet travel marketplaces. *Online Information Review,* vol. 28, no 4, pp. 292–300.

Taylor A.B., Mackinnon D.P., Tein J.Y. (2008) Tests of the three-path mediated effect. *Organizational Research Methods,* vol. 11, no 2, pp. 241–269.

Tsai M.-T., Cheng N.-C., Chen K.-S. (2011) Understanding online group buying intention: The roles of sense of virtual community and technology acceptance factors. *Total Quality Management & Business Excellence,* vol. 22, no 10, pp. 1091–1104. DOI: 10.1080/14783363.2011.614870.

Villegas N.M., Sánchez C., Díaz-Cely J., Tamura G. (2018) Characterizing context-aware recommender systems: A systematic literature review. *Knowledge-Based Systems,* vol. 140, no 15, pp. 173–200.

Yi H., Chen Q., Kitkuakul S. (2018) Regulatory focus and technology acceptance: Perceived ease of use and usefulness as efficacy. *Cogent Business & Management,* vol. 5, pp. 1–22.

Yuan S., Jeyaraj A. (2013) Information technology adoption and continuance: A longitudinal study of individuals' behavioral intentions. *Information & Management,* vol. 50, no 7, pp. 457–465.

Zampetakis L.A., Lerakis M., Kafetsios K., Moustakis V.S. (2015) The moderating role of anticipated affective ambivalence in the formation of entrepreneurial intentions. *International Entrepreneurship and Management Journal,* vol. 12, no 3, pp. 815–838. DOI: 10.1007/s11365-015-0367-2.

Zhao S., Zhou M.X., Quan Y., Zhang X., Zheng W., Fu R. (2010) Who is talking about what: Social map-based recommendation for content-centric social websites. *Proceedings of the 2010 ACM Conference on Recommender Systems, RecSys 2010, Barcelona, Spain, September 26-30, 2010* (eds. X. Amatriain, M. Torrens, P.J. Resnick, M. Zanker), New York: Association for Computing Machinery, pp. 143–150. DOI: 10.1145/1864708.1864737.